LANVAIN

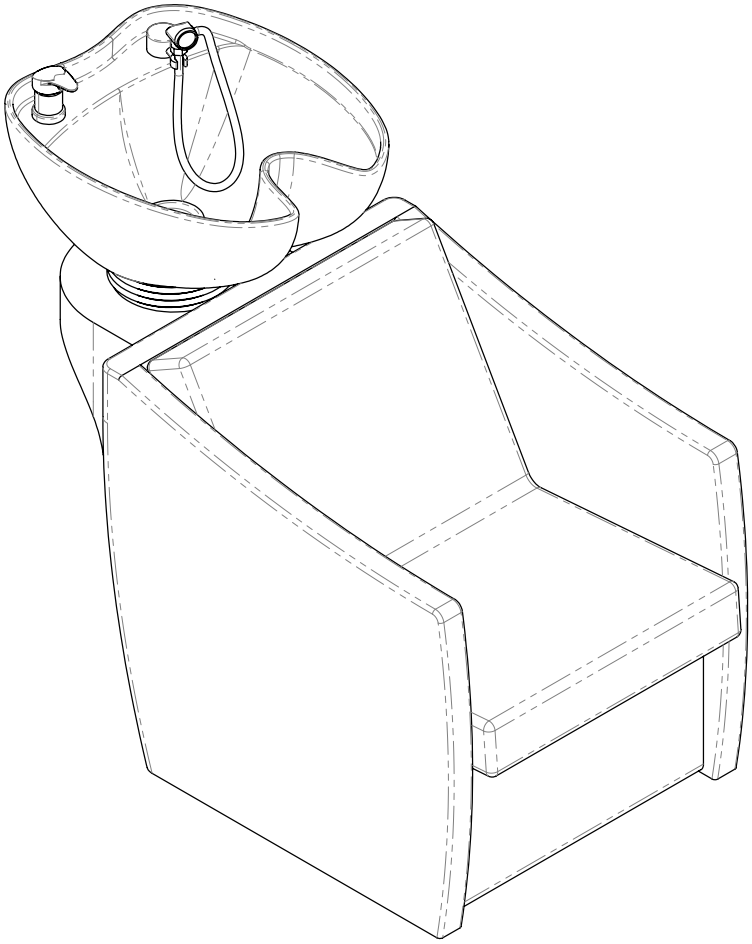

Bac de Lavage / Backwash Unit

TAZ

UGS : 135

Dimensions (pouces / inches)

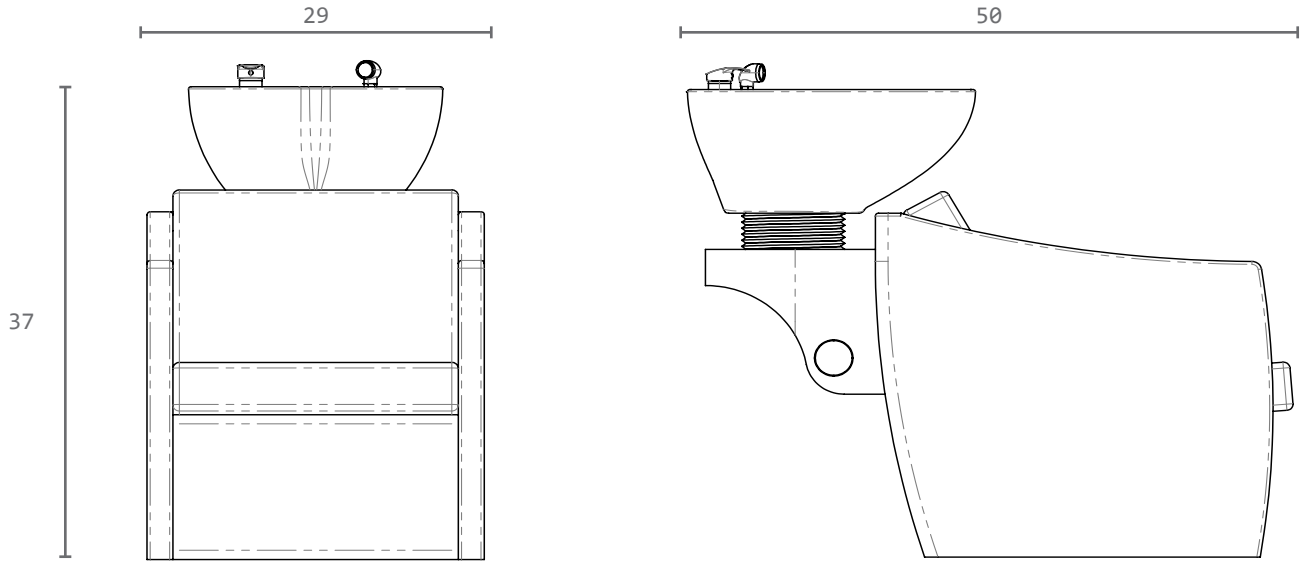

Dans les boîtes / In the boxes

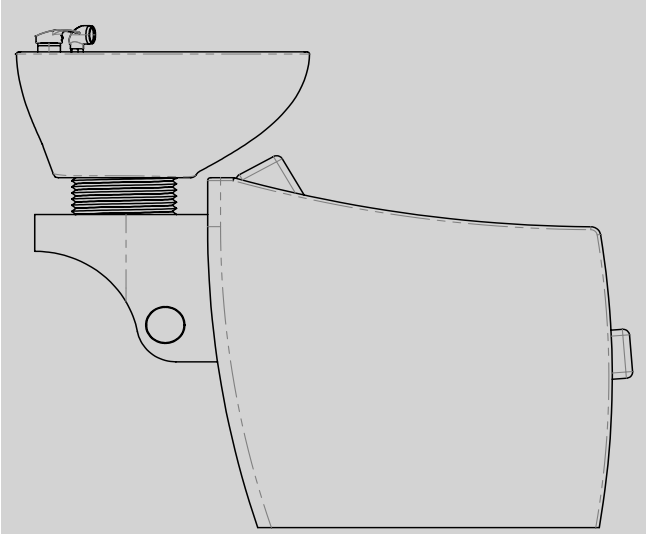

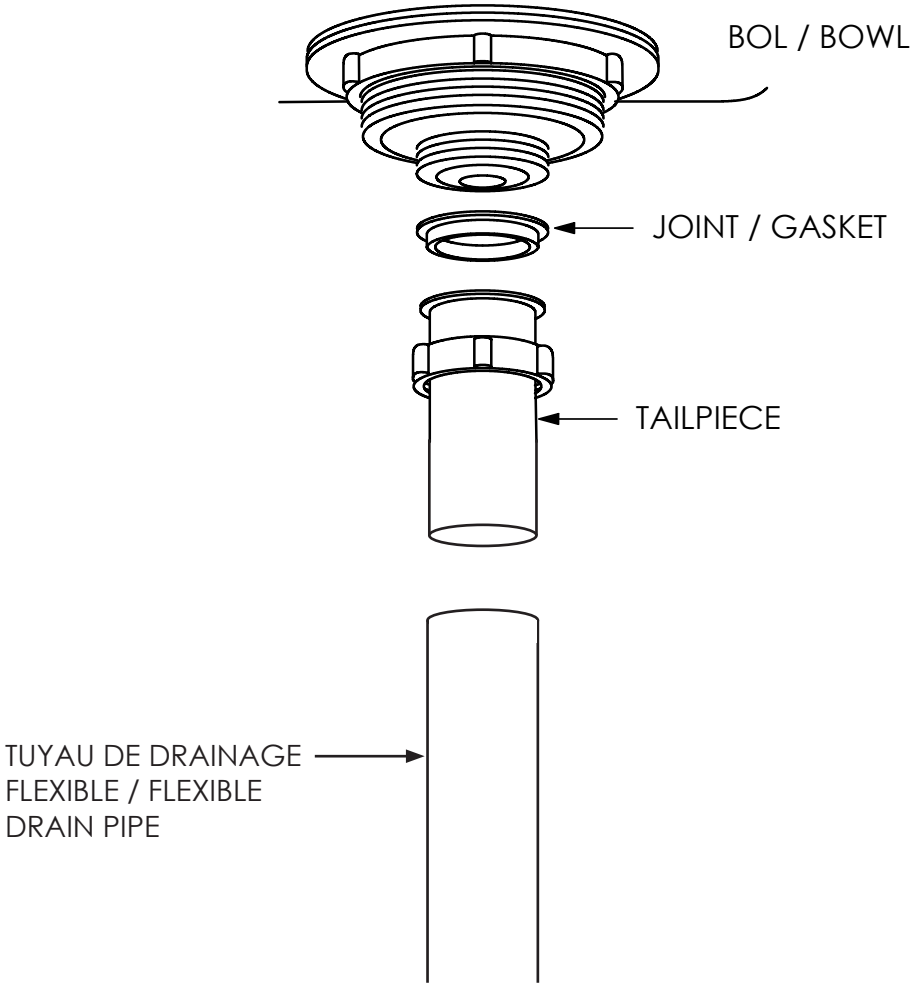

3. Installer le tuyau de drainage au tailpiece à l'aide d'un collier de serrage *L'installation doit être fait par un plombier certifié* / Install the drain pipe to the tailpiece using a clamp *The installation must be done by a certified plumber*

Installation pour travailler en arrière / Installation to work behind

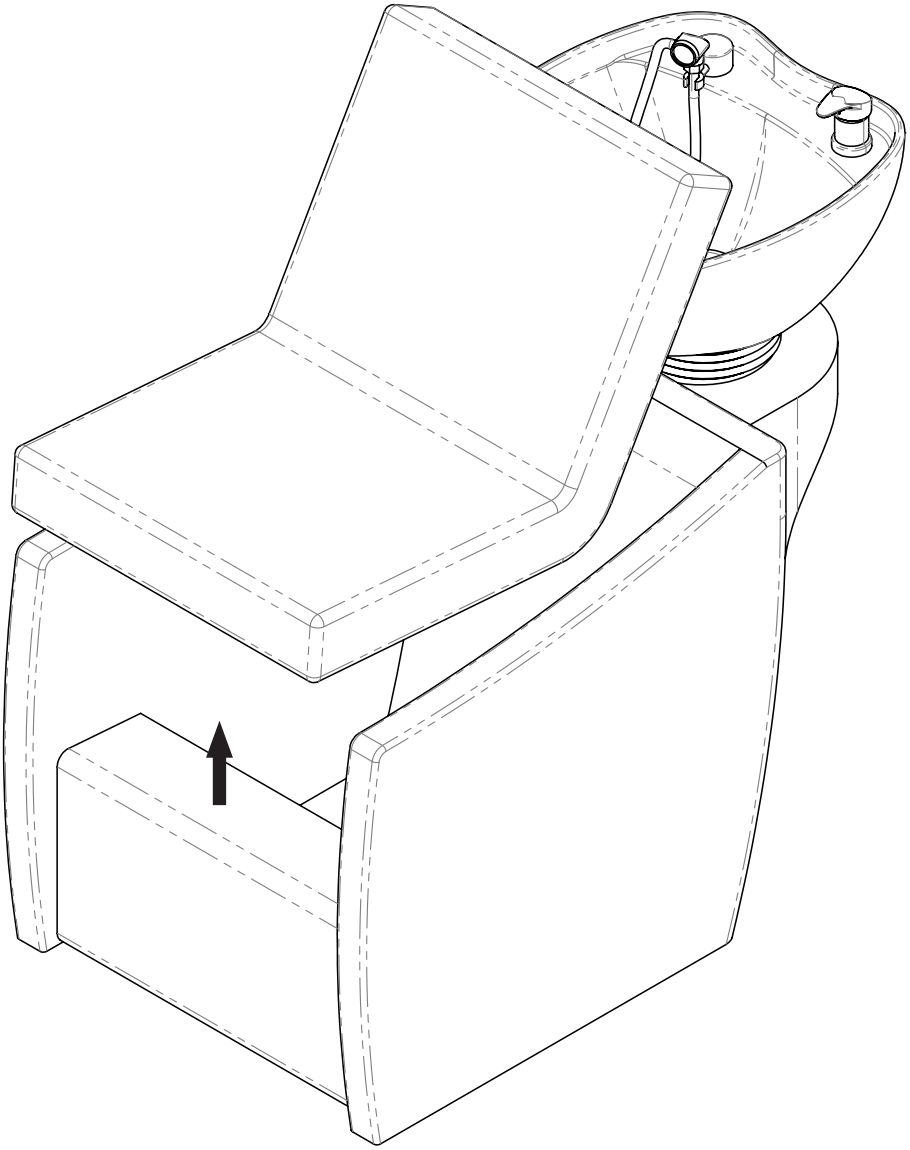

Soulever le coussin pour avoir accès à l'intérieur de l'unité
/ Lift the cushion to access the interior of the unit

*Il est recommandé de visser ce bac de lavage au sol / It is recommand to bolt this backwash unit to the floor

Installation pour travailler en arrière / Installation to work behind

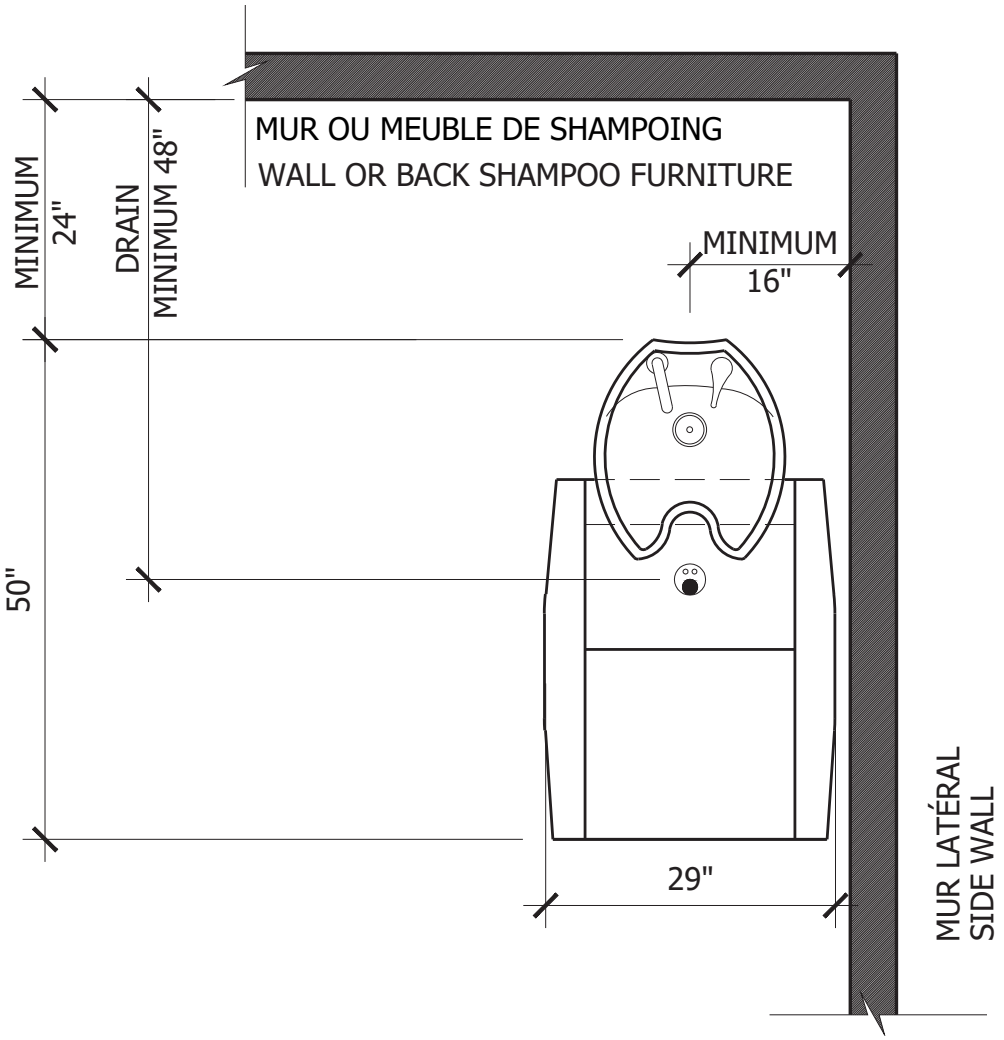

1. ENTRÉE D'EAU CHAUDE 1/2"Ø
2. ENTRÉE D'EAU FROIDE 1/2"Ø
LES ENTRÉES D'EAU PEUVENT PROVENIR DU PLANCHER OU DU MUR ARRIÈRE.
3. DRAIN 2" DIAM.
4. OUVERTURE POUR TUYAUX 3-1/4"Ø

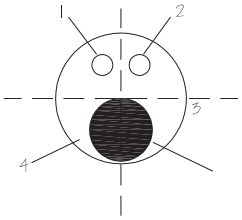

1. 1/2"Ø HOT WATER SUPPLY LINE
2. 1/2"Ø COLD WATER SUPPLY LINE
3. DRAIN 2" DIAM.
4. OVERALL OPENING 3-1/4"Ø MAX.

*L'installation doit être fait par un plombier certifié / The installation must be done by a certified plumber

Installation pour travailler en arrière / Installation to work behind

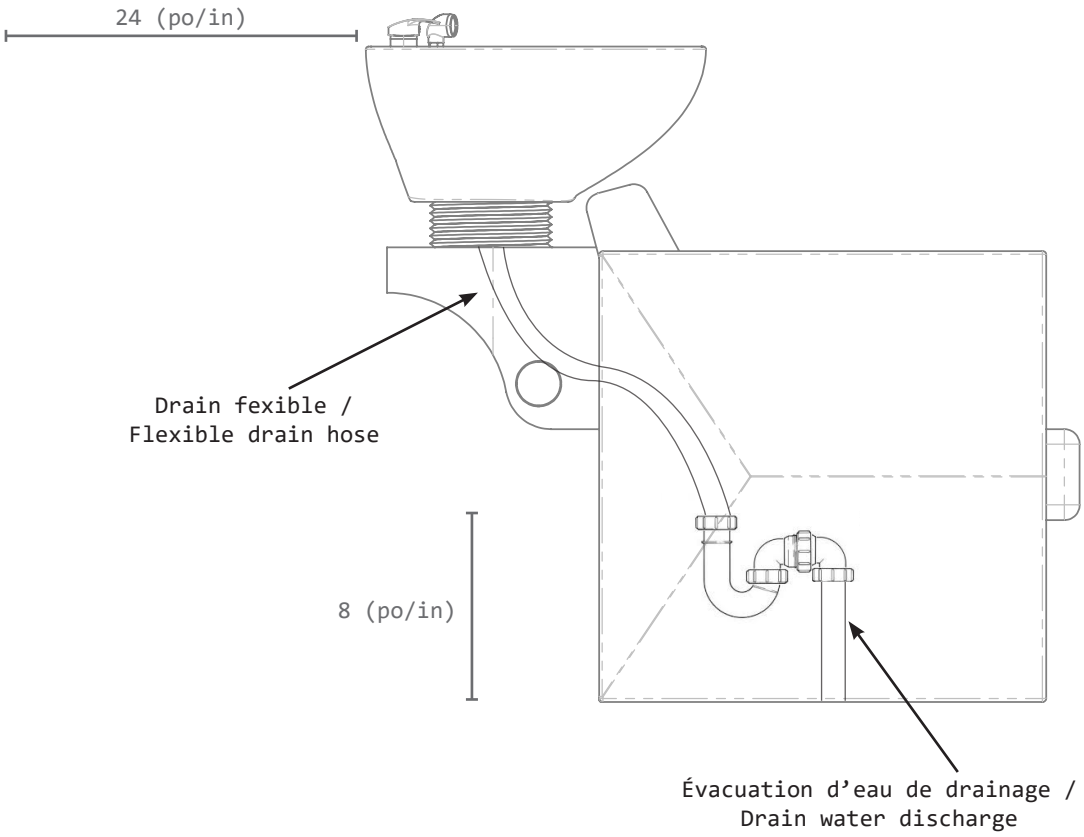

*L’installation doit être fait par un plombier certifié / The installation must be done by a certified plumber

Installation pour travailler sur le côté / Installation to work on the side

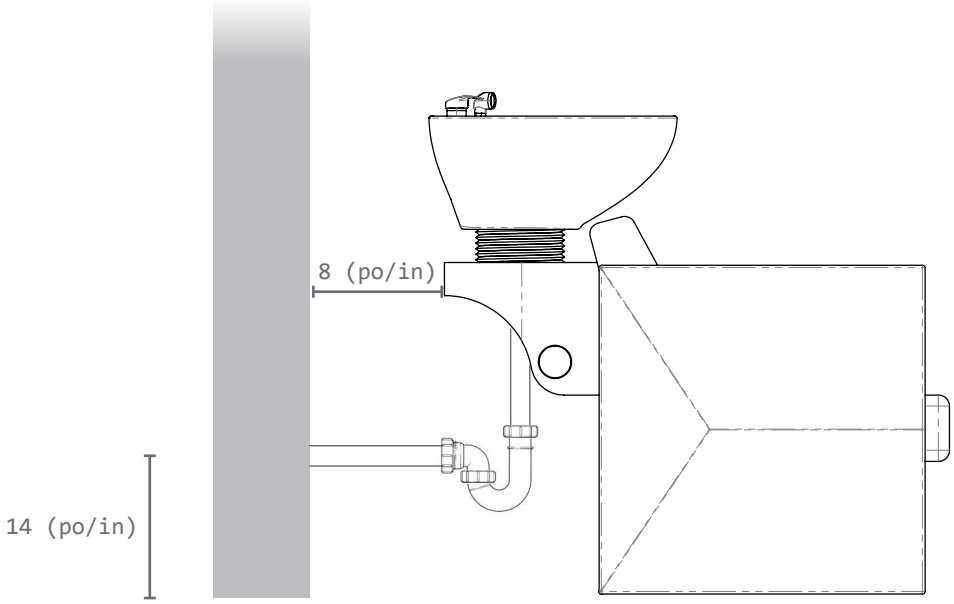

*L'installation doit être fait par un plombier certifié / The installation must be done by a certified plumber

Dans le salon / In the salon*

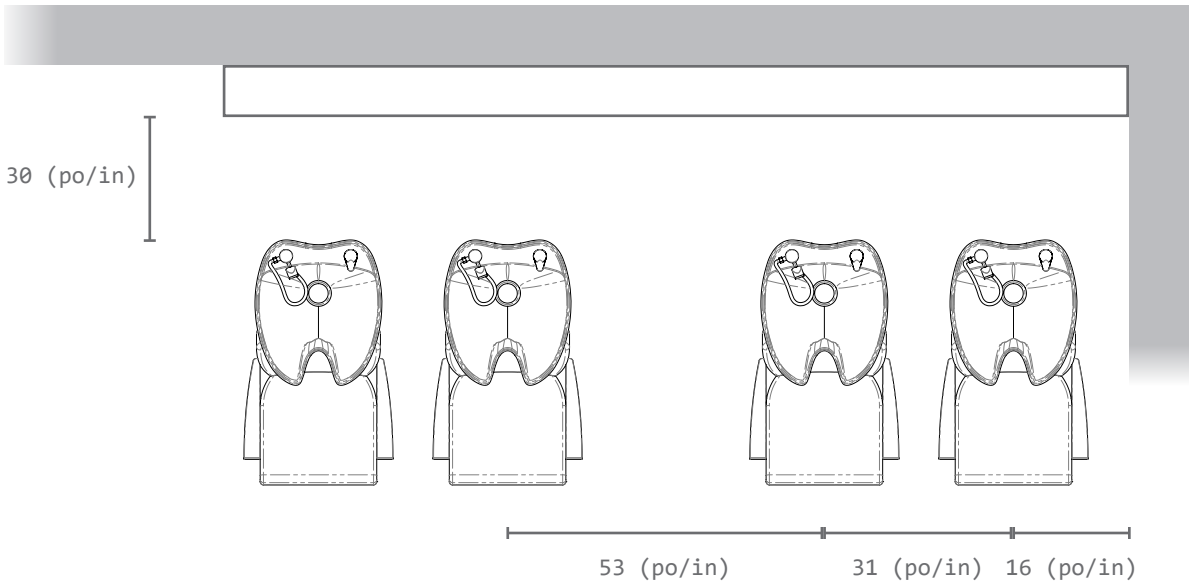

*À titre indicatif / For guidance

Utilisation / Usage

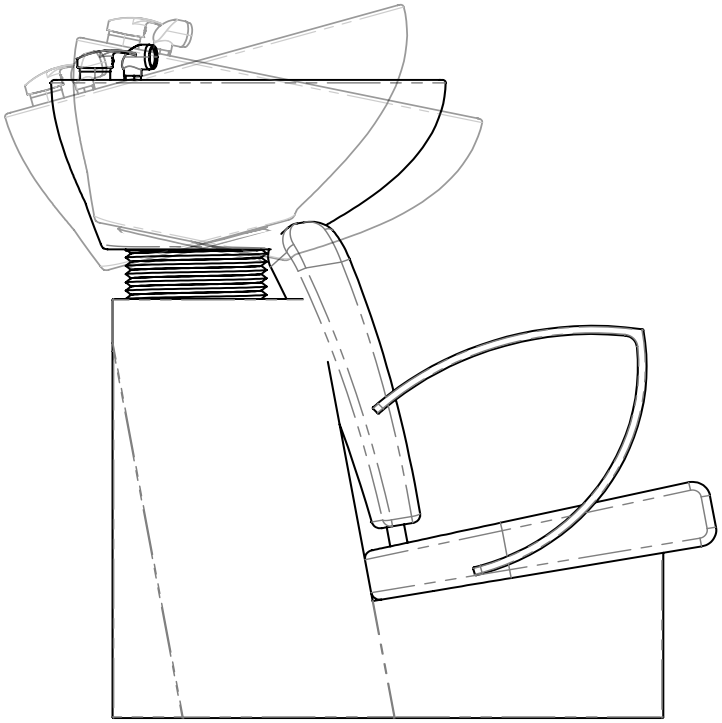

Inclinaison / Tilt

Entretien / Maintenance

Eau / Water Savon doux / Soft soap

*Tout type de produit contenant un agent corrosif peut endommager et accélérer la dégradation de cet item /
Any type of product containing a corrosive agent can damage and accelerate the degradation of this item

IAPMO R&T Product Listing

This IAPMO R&T Listing is current as of August 27, 2022

File Number:

7930

Issued To:

KAIPING XITE HARDWARE FACTORY

E3-3, DAJINGHENG ROAD, NO.3 INDUSTRIAL ZONE, SHUIKOU TOWN, KAIPING CITY KAIPING,GUANGDONG, CHINA

Product:

Plumbing Fixture Fittings

Products are in compliance with the following code(s):

Uniform Plumbing Code (UPC®)
National Plumbing Code of Canada

Products are certified to the following standard(s):

ASME A112.18.1-2018/CSA B125.1-18

IAPMO R&T Product Listing Directory

Issued To: KAIPING XITE HARDWARE FACTORY

File Number: 7930

Product: Plumbing Fixture Fittings

This IAPMO R&T Listing is current as of August 27, 2022

Identification:
Plumbing supply fittings shall be marked with the manufacturer's recognized name, trademark, or the mark or, in the case of private labeling, the name, trademark or other mark of the customer for whom the fitting was manufacture. The marking shall be accomplished by use of a permanent mark or by placing a permanent label on the product. Markings on plumbing supply fittings shall be visible after installation.

Showerheads and hand-held showers shall be marked with the manufacturer's specified maximum flow rate, in L/min and gpm.

Kitchen, lavatory, and metering faucets shall be marked with the manufacturer's specified maximum flow rate, in L/min and gpm or L/cycle and gpc.

Single-handle and single-control bath and shower mixing valves shall have their temperature control settings identified alphabetically, numerically, or graphically.

High-efficiency commercial pre-rinse spray valves shall be marked with the manufacturer's specified maximum flow rate, in L/min (gpm).

Listed products shall bear the cUPC® certification mark.

Packaging for plumbing supply fittings shall be marked with the manufacturer's name, trademark, or other mark as well as the model number or, in the case of private labeling, the name, trademark, or mark of the customer for whom the fitting was manufactured as well as the model number.

Packaging for showerheads and hand-held showers shall be marked with the manufacturer's specified maximum flow rate and either the manufacturer's specified minimum flow rate or the statement "For use with automatic compensating valves rated at xxx L/min (yyy gpm) or less", where xxx L/min (yyy gpm) is the manufacturer's specified minimum flow rate.

Packaging for kitchen, lavatory, and metering faucets shall be marked with the manufacturer's specified maximum flow rate, in L/min and gpm or L/cycle and gpc.

Characteristics:
Fittings may include lavatory, sink, bath & shower, lawn and sediment faucets. Plumbing fixture fittings to be installed in accordance with the manufacturer's instructions and the requirements of the latest edition of the Uniform Plumbing Code and National Plumbing Code of Canada.

LANVAIN

WHEN ONLY THE BEST WILL DO